Information optic-electronic system for analysing pulse signals for early diagnosis of cardiovascular pathologies

Tetiana Nikitchuk*[a], Oksana Okunkova[a], Yuliya Bogoyavlenska[a], Oleksandr Andreiev[a], Maktagali Bektemessov[b], Vadym Matsiievskiy[a], Inna Vishtak[c], Iryna M. Kobylianska[c], Saule Smailova[d], Żaklin Grądz[e]

[a]Zhytomyr Polytechnic State University, 103 Chudnivska str., Zhytomyr, Ukraine; [b]Institute of Information and Computational Technologies CS MHES RK, Almaty, Kazakhstan; [c]Vinnitsa National Technical University, Vinnitsa, Ukraine; [d]D. Serikbayev East Kazakhstan Technical University, Oskemen, Kazakhstan; [e]Department of Electronics and Information Technology, Lublin University of Technology, Nadbystrzycka 38D, Lublin, Poland

ABSTRACT

The information system for automated analysis of photoplethysmographic signals aimed at early diagnosis of cardiovascular dysfunctions has been developed within the research. The proposed system is based on the use of the phase plane method, which allows quantifiably assess the dynamic characteristics of photoplethysmographic signals and detect hidden changes in the cardiovascular system. The architecture of the system, the principles of forming phase portraits, methods for calculating diagnostic criteria (degree of chaos, area, fractal dimension), and the algorithm for automated generating of medical conclusion has been presented. The advantages of using the phase plane to overcome the limitations of existing pulse wave analysis methods and improve the efficiency of early diagnosis have been demonstrated.

Keywords: diagnosis of cardiovascular pathologies, optic-electronic system, pulse signals

1. INTRODUCTION

The rapid development of information systems and technologies is radically changing all spheres of human activity, significantly increasing the life standards. In this context, biotechnical systems (BTS) are actively being created, which are a symbiosis of the human body and assistive technological means for life support.

The development of medical information and technical systems allows for significantly intensifying diagnostic procedures, ensuring accurate prognosis and authentication of a person's state, and also opens up new opportunities for conducting computer modelling and simulation experiments.

However, the evolution of the BTS demonstrates that from its three main elements – the patient, the doctor and the technological means – the latter has the fastest and most profound changes. This leads to an increasing variety of specialised units and devices, which, at the same time, makes more complicated their exploitation by medical and technical personnel.

To increase the efficiency of automated diagnostics is possible by transforming medical and biological data into the system of analysis criteria based on their comparison with established normative indicators.

2. RELATED WORKS AND PROBLEM STATEMENT

Nowadays there is a significant increase of interest in the development of information systems for pulsation analysis and complex diagnostics of the cardiovascular system (CVS). Among the most common methods for assessing the state of the CVS, which also indirectly disclose the functional state of other organs and systems of the body, it is worth to highlight electrocardiography (ECG) and various types of pulse oximetry. Electrocardiogram data provide clinically important information for diagnosis and treatment; allow identifying the structural and functional changes in cardiac

*ntm@ztu.edu.ua

Photonics Applications in Astronomy, Communications, Industry, and High Energy Physics Experiments 2025, edited by Andrzej Smolarz, Ryszard S. Romaniuk, Waldemar Wójcik, Sergii V. Pavlov, Proc. of SPIE Vol. 14009 140090J · © 2025 SPIE · 0277-786X · doi: 10.1117/12.3098195

activity. However, the ECG cannot always provide full answers to all diagnostic questions regarding the integral state of the cardiovascular system. Instead, the pulsogram, in addition to the characteristics of cardiac activity, details the features of blood flow, which closely correlates with the functional state of the cardiovascular system and the body as a whole[1-5].

The pulse signal shows processes of higher levels of regulation and numerous hemodynamic indicators of the CVS (intravascular pressure, arterial wall tension, characteristics of wave processes in the arterial system, dynamics of blood volume movement, its viscosity, and wave interference in the vessels). These dynamic processes directly affect the shape of the pulse wave and its rhythmic structure. Deviations of rhythmic parameters from the norm, in turn, are a sensitive indicator of pathological states[6-7].

Historically, a significant amount of information about the pulse wave has been accumulated by clinicians over the long period of existence of pulse diagnostics[8-10]. Modern development of computer science allows implementing digital processing of the pulse signal using a wide range of methods and technical means[10-12]. Thus, a complex analysis of pulse signals opens up broader diagnostic possibilities for a comprehensive assessment of the state of the cardiovascular system.

Methods of digital processing of pulsograms include computer filtering and extraction of useful information (contour methodics, spline approximation, Fourier analysis, various types of wavelet transformation, use of the phase plane method), as well as determination of changes in diagnostic parameters. Most often, analysis is implemented in the time domain, since this representation of the signal is most understandable for medical personnel.

The assessment of pulsogram contours[7] is often limited to the analysis of single periods of oscillations and is not always done by highly qualified specialists. As a result, the contour analysis of pulse curves reflects only the general morphology of blood pressure fluctuations, not providing an adequate qualitative and quantitative assessment of the state of the cardiovascular system (CVS).

The information system[10] is based on an in-depth amplitude-time analysis of the radial artery pulsogram, including analysis of the shape and rhythmic structure of the pulse signal. This approach allows to detect changes in the amplitude, phase, and geometry of the pulse wave contour, correlating them with the corresponding pathological conditions of the CVS. Analysis of human functional state using pulse spectrometry was considered in[6,9]. However, these methodics are characterised by complexity both in conceptual understanding and in computational implementation. They require complex spectral decomposition, high-speed mathematical algorithms and software, and their accuracy is achieved by an individualised approach to each certain spectrum, which makes impossible the fully automatisation of the diagnostic process.

In Ukraine, current researches of pulse measurement systems are mainly based on the aforementioned methods of processing and analysing pulse signals, which already have the above-mentioned limitations. In particular, these are computerised pulse measurement systems[6,9-10], which use amplitude-time and spectral methods of pulse wave analysis to assess the patient's state (the method is based on the analysis of the graphic display of pressure curves in the vessels of the cardiovascular system and is used in the diagnosis of aortic defects, assessment of cardiac chronometry and pulse wave velocity)[10]. However, the use of sphygmograph devices is associated with a big number of limitations that do not fully meet the requirements of modern clinical practice. These disadvantages include low research efficiency and a limited number of available signal recording channels. Modern sphygmography signal recording systems, that use sensitive solid-state pressure sensors with an elastic membrane, piezoelectric and pneumatic sensors, have a disadvantage – the susceptibility to mechanical artefacts, which reduces the reliability of the obtained data.

Considering that pulsogram provides important information about hemodynamics and is especially valuable in combination with other cardiac signals (ECG, FCG, BP), it's effective analysis requires the use of not only highly specialised, but also general physical and mathematical methods. An example of such a method is the phase plane method[13-15], intended for research the dynamic systems[16].

The purpose of the research is to develop a biotechnical information system for analysing pulse signals in the phase plane to detect cardiovascular dysfunctions.

The scheme of the biotechnical information system can be presented in Fig. 1, which shows the cycle: patient – technical means of analysis and diagnostics – expert system – medical control – patient[8]. In the context of technical means of pulse diagnostics, the key aspect is the automation of the process of forming medical conclusions.

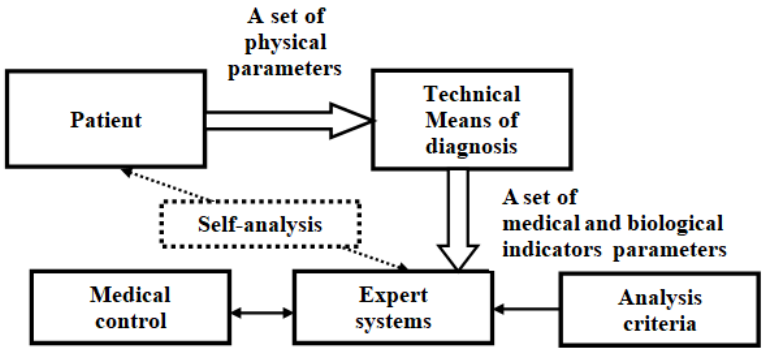

Figure 1. Block diagram of the diagnostic appointment system

The high efficiency of these information systems is achieved due to the accurate and correct classification of pulsogams types and their relations to possible dysfunctions of the cardiovascular system, which is integrated into the automated system. The recent usage of peripheral computing and AI allows predicting pathologies at early stages[16-17].

3. EXPERIMENTAL RESEARCH

Experimental research were done on a hardware-software complex for recording, displaying and analysing pulse signals (Fig. 2a)[18] and using the ChoiceMMed MD2000C patient vital signs monitor (Fig. 2b) of the laboratory of medical devices and systems of the Zhytomyr Polytechnic State University (Fig. 3).

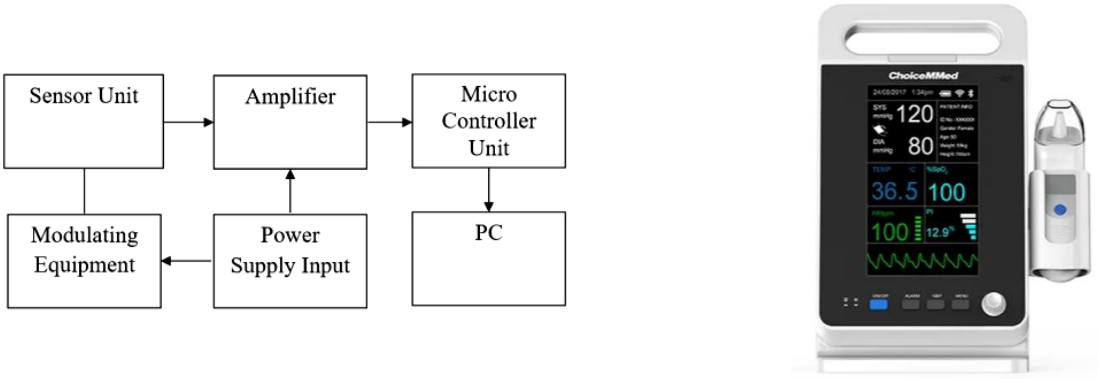

a b

Figure 2. Conducting research in the university laboratory: a) hardware unit of the information system b) patient vital signs monitor ChoiceMMed MD2000C

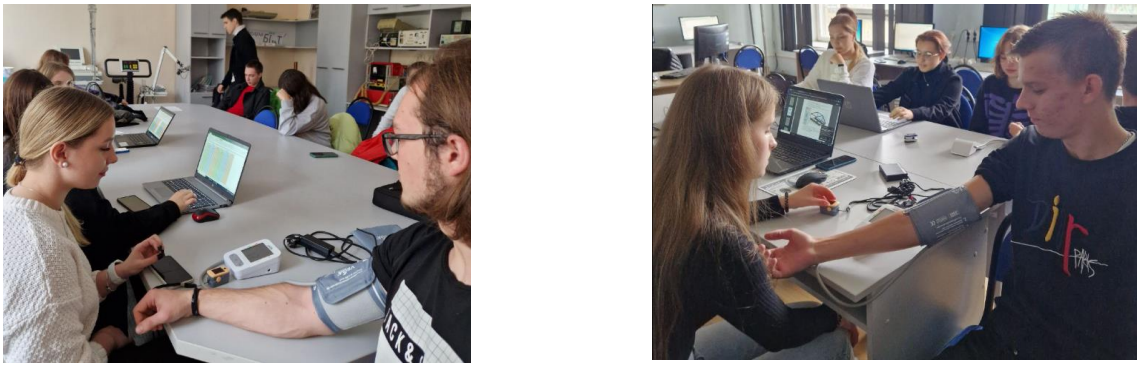

Figure 3. Conducting research in the laboratory of medical devices and systems of the Zhytomyr Polytechnic State University

Pulse signals were recorded using photoplethysmography (PPG), an affordable, non-invasive optical monitoring method that do records easily from the skin using light and a photodetector. PPG captures fluctuations in blood volume by detecting changes in light absorption or reflection caused by these volume changes. A growing interest in non-invasive physiological control and a continuous monitoring of patients outside the hospital has led to a significant spread and active research technology that is confirmed, including publication (Fig. 4)[19-21].

The analogue part of the hardware-software block consists of an optical sensor block, an amplifier and modular equipment. The other blocks belong to the digital part. The amplified signals coming from the sensor unit are transmitted to the PC via the USB input, and the pre-processed photoplethysmography signal is displayed in the program window[20].

The photoplethysmography method allows the use of non-contact sensors. With this method, there is no compression of the arteries, which exclude blood circulatory disorders and allows to use calculations to determine the oxygen saturation of the pulse wave[23-24].

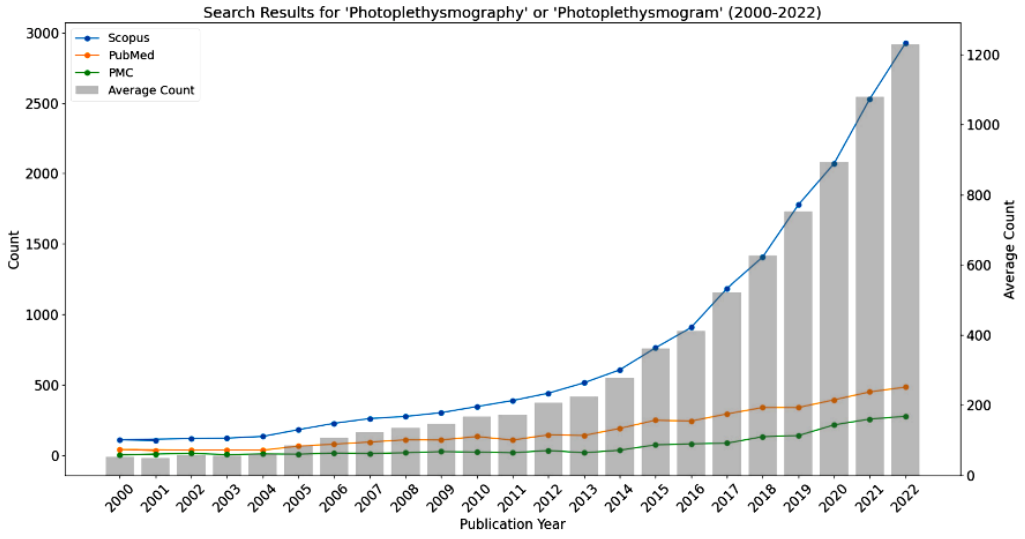

Figure 4. Bar chart depicting the annual number of articles indexed in PubMed from 2000 to 2022, using the keywords ‘‘Photoplethysmography’’ or ‘‘Photoplethysmogram’’[19]

Thus, by using the developed photoplethysmography unit (Fig. 2a) and methods of digital processing of the photoplethysmographic signal, there were obtained the result as presented in Fig. 5. The attention should be paid on: the pulse graph is displayed in real time. Also, data recording into the database has been introduced, which will be very convenient for maintaining statistics and history of the examined. The Hardware and Software Complex Overview.



Figure 5. The Hardware and Software Complex Overview and the window with pulsograms

4. SYSTEM ARCHITECTURE AND FUNCTIONALITY

The described hardware is a component of the information system (Fig. 6), which will also include another edge device, which will instantly transfer data to the database on the edge server for further processing and storage of the received data[25-26].

In order to research the dynamics of the cardiovascular system (CVS) and determine a set of diagnostic criteria from pulse waves recorded over long time intervals, the use of fractal analysis methods has been proposed. Fractal analysis allows identifying the properties of self-similarity and regularity in time sequences. For the quantitative assessment of pulsograms in the long term, the phase plane method is prospective, and previously proven in the authors' works[15]. Its effectiveness is in the fact that in case of changes in heart rhythm or the occurrence of cardiovascular system dysfunctions, not only the sequence of periods is transformed, but also the rate of their change in time.

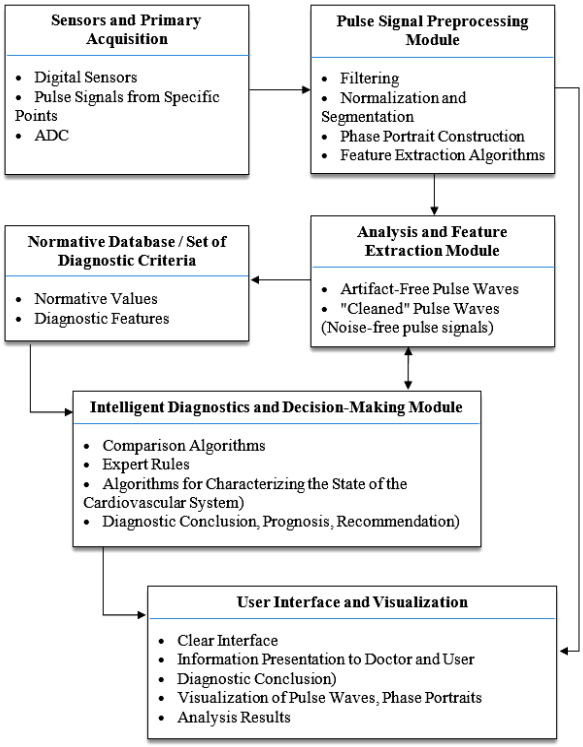

Figure 6. Architecture of a biotechnical information system for pulse signal analysis and cardiovascular system research

The indicators of the phase portraits of pulse signals selected as diagnostic criteria confirmed the correctness of the developed classification for the most common pulse types. The test was carried out on 1000 pulse signals recorded by the hardware-software complex (Fig. 6).

Therefore, the pulse type is determined by a complex of analysis criteria:

$$y_j = \begin{Bmatrix} A_{Sh}, & A_{minSh} \le A_{Sh} \le A_{maxSh} \\ A_S, & A_{minS} \le A_S \le A_{maxS} \\ A_D, & A_{minD} \le A_D \le A_{maxD} \end{Bmatrix}, \quad (1)$$

where y_j – the conclusion y of the system regarding pulse type j, j =1, n, n = 6. Then, the structural diagram of the pulsogram analysis algorithm with automated conclusion can be presented by Fig. 7.

The algorithm consists of the following key steps.

1. Input Data – the initial stage is responsible for receiving the 'raw' pulse signal from two

- From Device: signal can come directly from the recording device in real time via the hardware communication interface.
- From File: signal can be loaded from a previously recorded file containing pulse data (e.g. from a patient database, research archive).

2. At this stage, analog-to-digital conversion (if the signal is analog), sampling, and primary filtering to eliminate high-frequency noise or coarse artefacts usually occur.
3. Phase Plane Representation – this algorithm allows moving from a one-dimensional time lug (pulse wave) to a two-dimensional space, which better reflects the dynamic attributes of the system. A phase portrait (PP) is creating by presenting the pulse signal itself p(t) (or x(t)) along one axis (X axis) and its first derivative $\dot{x}(t)$ (speed of change of the signal) along the other axis (Y axis).

Each point on the phase plane reflects the instantaneous state of the system. The sequence of these points forms a trajectory (loop), which visually characterises the dynamics of the pulse wave. Unlike a conventional pulsogram, PP allows a more sensitive response to changes in the speed and acceleration of the process, which is important for detecting hidden dysfunctions of the cardiovascular system.

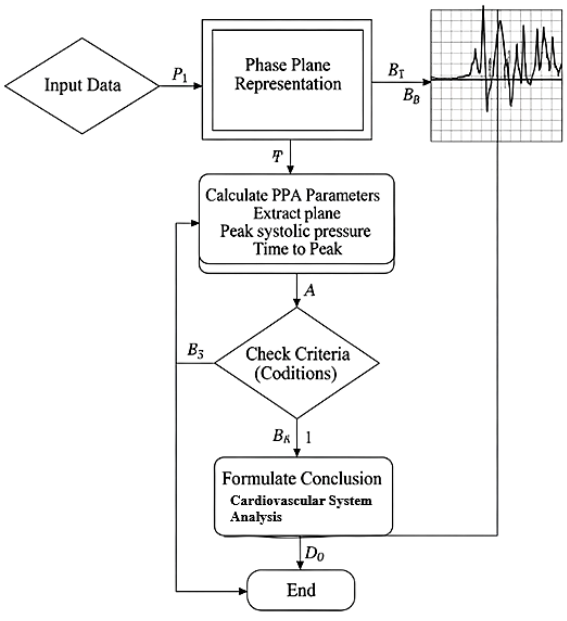

Figure 7. Pulse wave analysis algorithm

Thus, the algorithm provides automated processing of pulse signals, converting them into phase portraits for quantitative analysis and forming a preliminary diagnostic conclusion about the state of the cardiovascular system.

Note that getting into the “sampling set” means thresholding based on the ranges (min and max) of each criterion. This may not be robust enough, especially for complex cases and the presence of noise. Therefore, instead of “hard” thresholds, will further use classifier training based on a large annotated database.

5. CONCLUSIONS

An information system has been developed that effectively uses the phase plane method for analysing pulse signals. The presented structure and algorithm of the information system for analysing pulsegrams based on the indicators of their phase portraits are reasonable to use for research pulse oscillations over a long time interval.

The improving the hardware-software complex for recording pulse signals and creating an information system for analysing the nature and dynamics of changes in the main quantitative and qualitative indicators of human blood circulation will improve the efficiency of diagnosing pathologies of the cardiovascular system, create a virtual model for studying blood flow and predicting the occurrence of cardiovascular pathologies, in particular using machine learning and AI methods.

6. FUTURE WORK

- Increasing the volume and variety of clinical data for training and validation;
- Integration of more complex machine learning and artificial intelligence algorithms to improve classification and prognostication;
- Development of methods to eliminate the influence of artefacts and noise;
- Research the dynamics of PPS indicators in real time for patient monitoring;
- Integration with other medical data (ECG, medical history) for comprehensive analysis;
- Clinical implementation and approbation of the system.

ACKNOWLEDGEMENTS

The authors would like to thank to the “WIDE AcrossEU” project’s team, to the Horizon Europe program, to the European Union, European Research Executive Agency. The paper “Information system for analysing pulse signals for early diagnosis of cardiovascular pathologies” has been developed within the framework of the project “Widen performance in research and innovation capacity and competence Across EU” / “WIDE AcrossEU” 101 158 561 Horizon Europe program.

REFERENCES

[1] Valteris, A. D., "Sphygmography as a method of evaluating changes in hemodynamics under the influence of physical exertion," Yauya, Riga: Zinatne, 132, (1988).
[2] Roman, M. J., Devereux R. B., Kizer J. R., et al., "Central pressure more strongly relates to vascular disease and outcome than does brachial pressure: the Strong Heart Study," Hypertension 50(1), 197-203 (2007).
[3] Roman, M. J., Devereux R. B., Kizer J. R., et al., "High central pulse pressure is independently associated with adverse cardiovascular outcome the strong heart study," J. Am. Coll. Cardiol. 54(18), 1730-42009 (2009).
[4] Vysotska, O. V., Nosov, K. V. , Georgiyants, M., Balym, Y., Bespalov, Y., et al., "An approach to determination of the criteria of harmony of biological objects," Proc. SPIE 10808, 108083B (2018). https://doi.org/10.1117/12.2501539

[5] Vasilevskyi, O., Popovici, E. and Sarana, V., "Modeling and analysis of systolic and diastolic blood pressure using ecg and ppg signals," Informatyka, Automatyka, Pomiary w Gospodarce i Ochronie Środowiska 13(3), 5–10(2023). https://doi.org/10.35784/iapgos.5326
[6] Sharpan, O. B., "Software-measuring photoplethysmographic system of pulse spectrometry," Bulletin of the Vinnytsia Polytechnic Institute 5, 34–40 (2007).
[7] Zabirnyk, A. V., "Apparatus pulse diagnosis: Theory and practice," Kh.: Novoe slovo, 116 (2008).
[8] Nikitchuk, T. N., "Devising an information system for the analysis of pulse signals," EasternEuropean Journal of Enterprise Technologies 5, 19–23 (2015). doi:10.15587/1729-4061.2015.51219
[9] Sharpan, O. B., "Amplitude and phase pulse spectrometry in the tasks of determining the functional state of a person," Radio engineering fields, signals, devices and systems (theory, practice, history, education), Kyiv, 80–81 (2012).
[10] Storchun, Yu., Ye., "Modeling of elements of a biotechnical system of multichannel pulsometry and development of a device for forming pulse signals," Author's abstract of the dissertation, (2004).
[11] Kozlovskaya, T., "Optical-electronic device for diagnosing the state of peripheral circulation with high reliability," Ph.D. thesis, Vinnytsia National Technical University, Vinnytsia, (2012).
[12] Ruban, M. L. "Diagnostic complex for assessing the functional state of a person based on photoplethysmogram indicators," 483-491 (2015).
[13] Voloshin, O., Oleinik, V., Kulish, S. and Sami, A. O., "ECG method for diagnostics of human functional state on the basis of fractal analysis and wavelet transform," Radioelectronic and Computersystems 4, 29–34 (2010).
[14] Fainzilberg, L., "New opportunities of phasegraphy in medical practice," Science and Innovation 13, 37–50 (2017).
[15] Nikitchuk, T. M., "The phase plane method as a method of studying the state of the cardiovascular system based on pulse wave analysis," Bulletin of the National Technical University of Ukraine "Kyiv Polytechnic Institute" Series: Radio Engineering. Radio Equipment Manufacturing 48, 179–185 (2012).
[16] Hassan, N., Gillani, S., Ahmed, E., Yaqoob, I. and Imran, M., "The role of edge computing in internet of things," IEEE Communications Magazine 56, 110–115 (2018). doi:10.1109/ MCOM.2018.1700906
[17] Huh, J. and Seo, Y., "Understanding edge computing: Engineering evolution with artificial intelligence," IEEE Access, 7164229–164245 (2019). doi:10.1109/ACCESS.2019.2945338.
[18] Nikitchuk T., Vakaliuk T., et al., "Architecture for edge devices for diagnostics of students' physical condition," Joint Proceedings of the Workshops on Quantum Information Technologies and Edge Computing. Zhytomyr, Ukraine, CEUR Workshop Proceedings 2850, 45-56 (2021).
[19] Dao, D., et al., "A robust motion artifact detection algorithm for accurate detection of heart rates from photoplethysmographic signals using Time-Frequency spectral features," IEEE J. Biomed. Health Inform 21(5), 1242-1253 (2016).
[20] George, R. E., "Opening the envelope: Efficient envelope-based PPG denoising algorithm," Biomedical Signal Processing and Control 88(A), 105693 (2024).
[21] Pavlov, S. V., Barylo, A. S., Kozlovska, T. I., et al., "Analysis of microcirculatory disorders in inflammatory processes in the maxillofacial region on based of optoelectronic," Przeglad Elektrotechniczny 93(5), 114–117 (2017).
[22] Kukharchuk, V. V., Holodiuk, V. V., et al., "Information conversion in measuring channels with optoelectronic sensors," Sensors 22(1), 271 (2022).
[23] Alekseev, V., Perminov, A. and Yuran, S., "Mutual arrangement of the source and receiver of the sensor radiation for photoplethysmography," Instruments and methods of measurements 1, (2011).
[24] Isupov, I. B. and Zatrudina, R. S., "Electronic module for photoplethysmography and pulse oximetry," Natural Systems and Resources 8, (2018).
[25] Pavlov, S. V., Kozhukhar, A. T., Titkov, S. V, et al., "Electro-optical system for the automated selection of dental implants according to their colour matchin," Przeglad Elektrotechniczny 93(3), 121–124 (2017).
[26] Gorna, O,. Stanishevska, T., Kopulova, T., Yusupova, O. and Horban, D., "Research of the somatic health of student youth using information and communication technologies," E3S Web of Conferences 166, (2020). doi:10.1051/e3sconf/202016610034.